LIST No. DU 72X

Hinged Solid Top with Safety Grid

SPECIAL FEATURES

- All steel – unbreakable
- Can be supplied locking if required

Finish:
Black coated

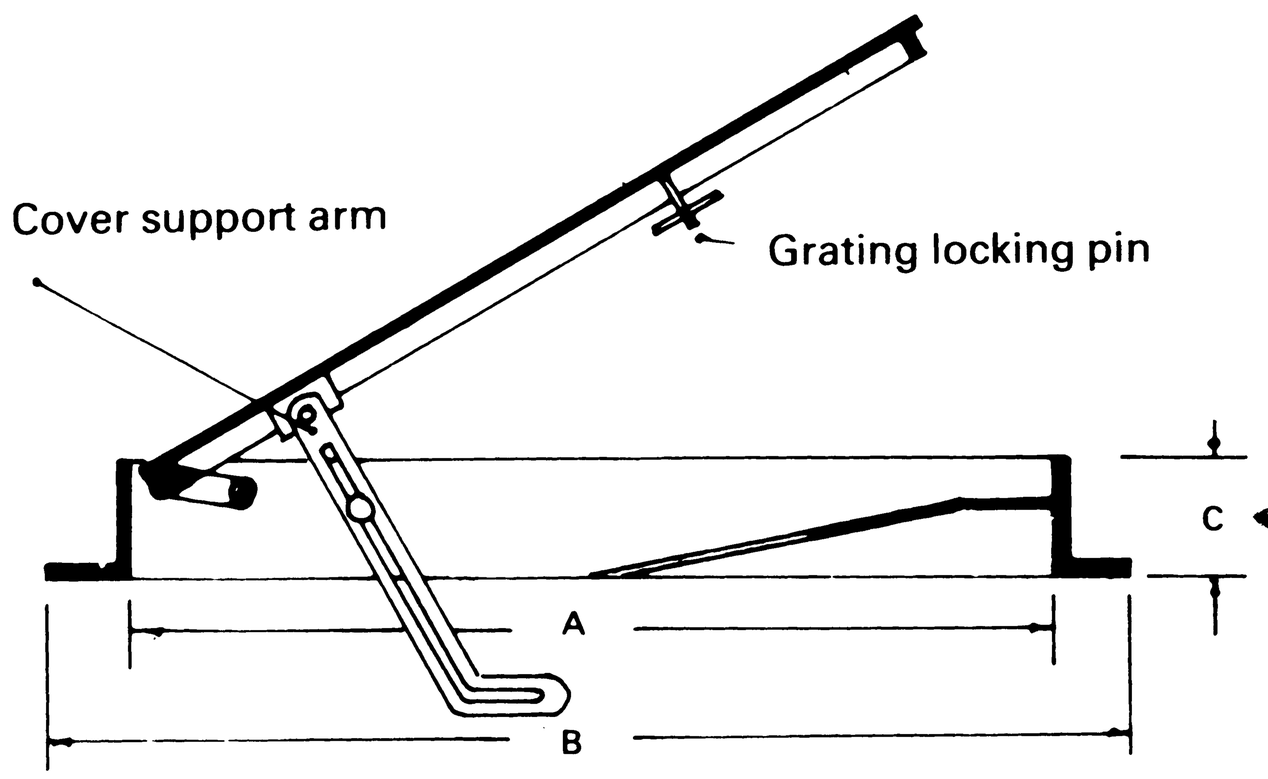

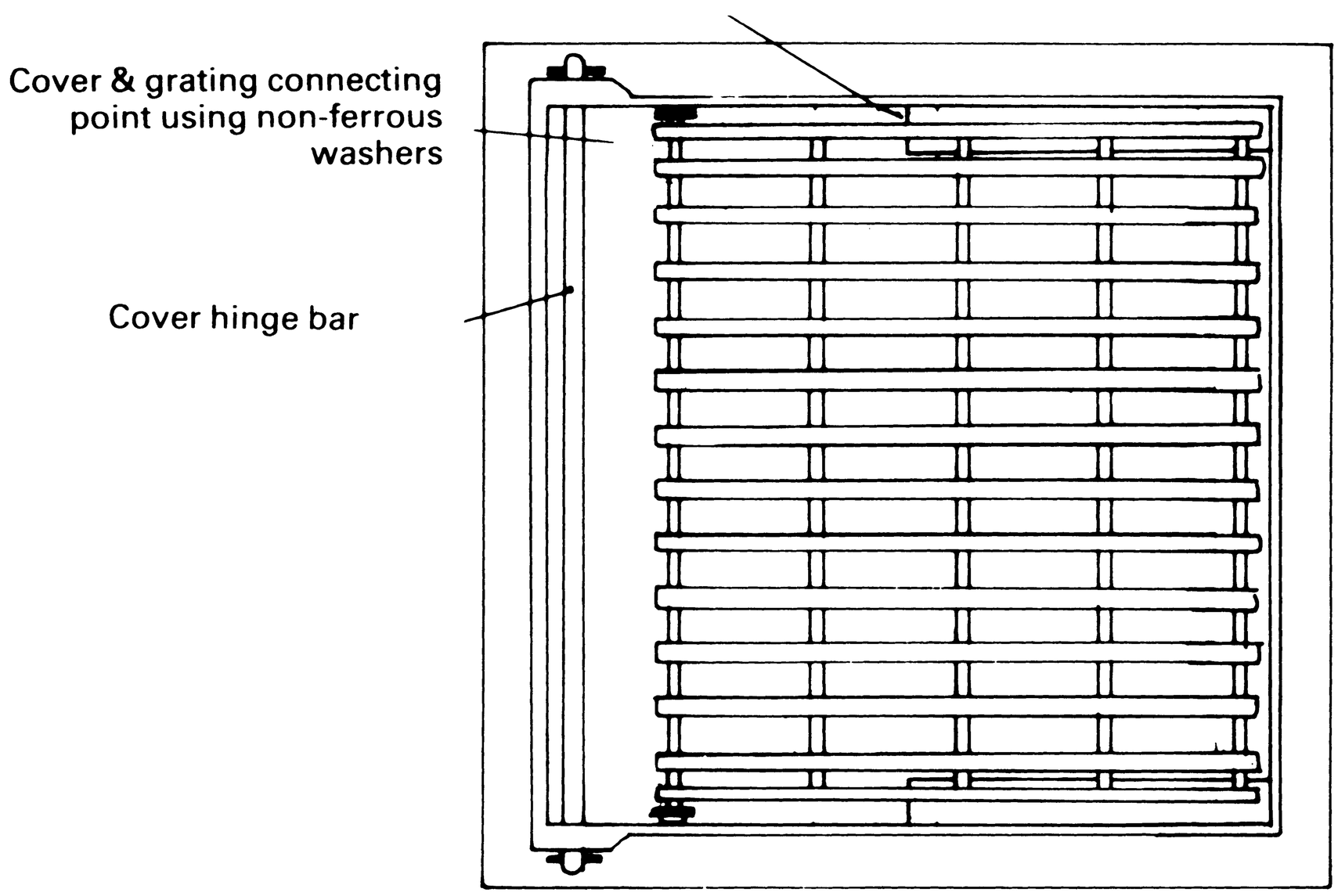

Plan showing grating but with cover removed.

LIST NO.	A CLEAR OPENING mm	B OVER BASE mm	C OVER DEPTH mm	LOADING
DU72AX	600 x 600	750 x 750	100	FACTA Class B (5T SMWL)
DU72BX	750 x 600	900 x 750	100	