LIST No. DU 382

Grey Cast Iron Double Triangular D400 & C250

SPECIAL FEATURES

- Three point suspension for guaranteed non-rock
- Available with four flanges if required

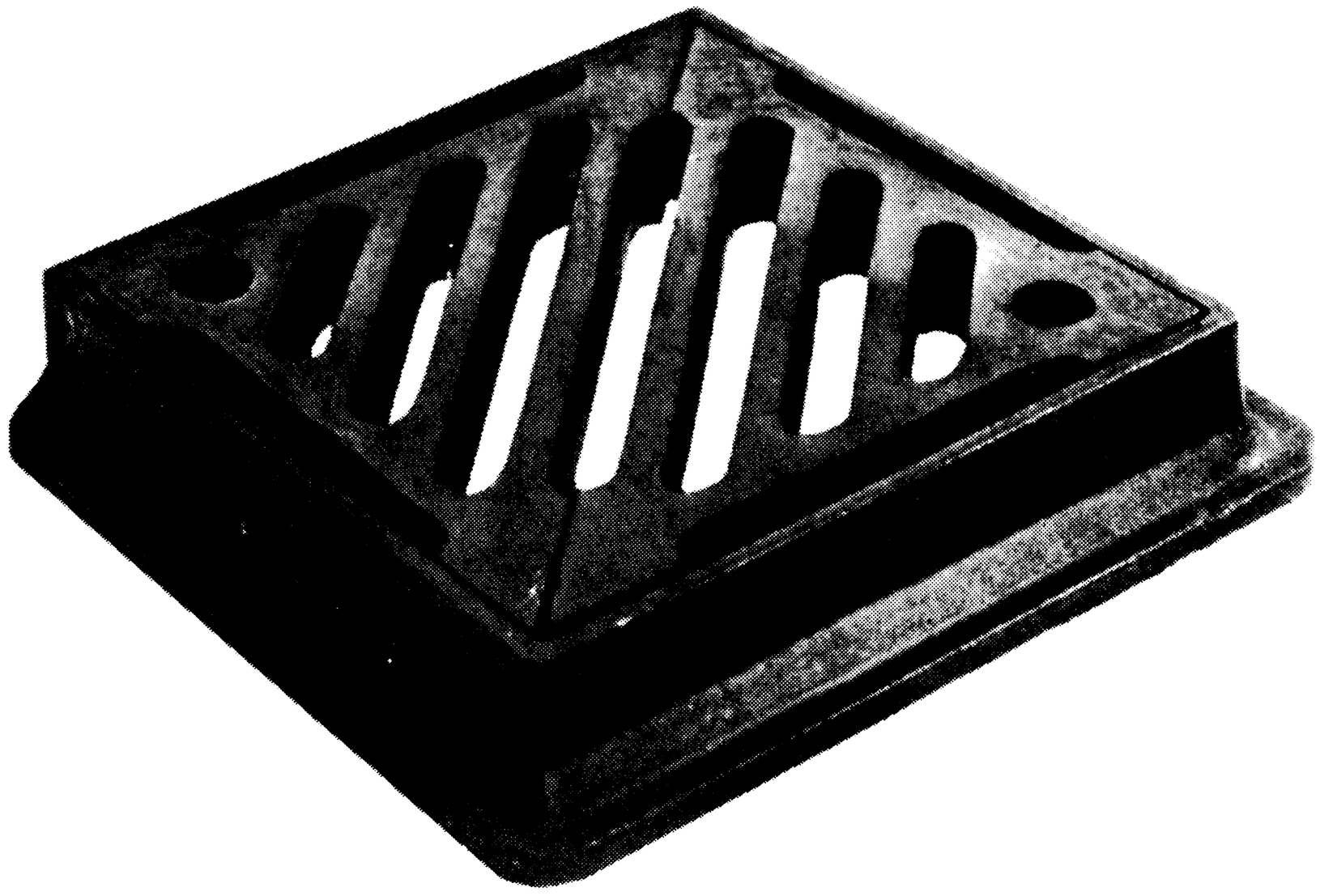

Gratings loosely coupled together with steel bolts

D400

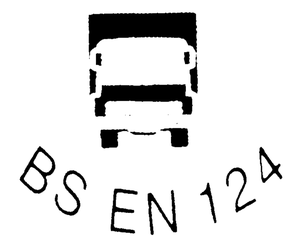

C250

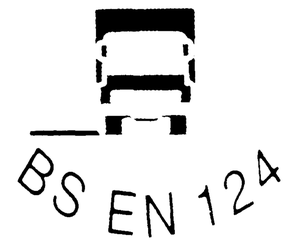

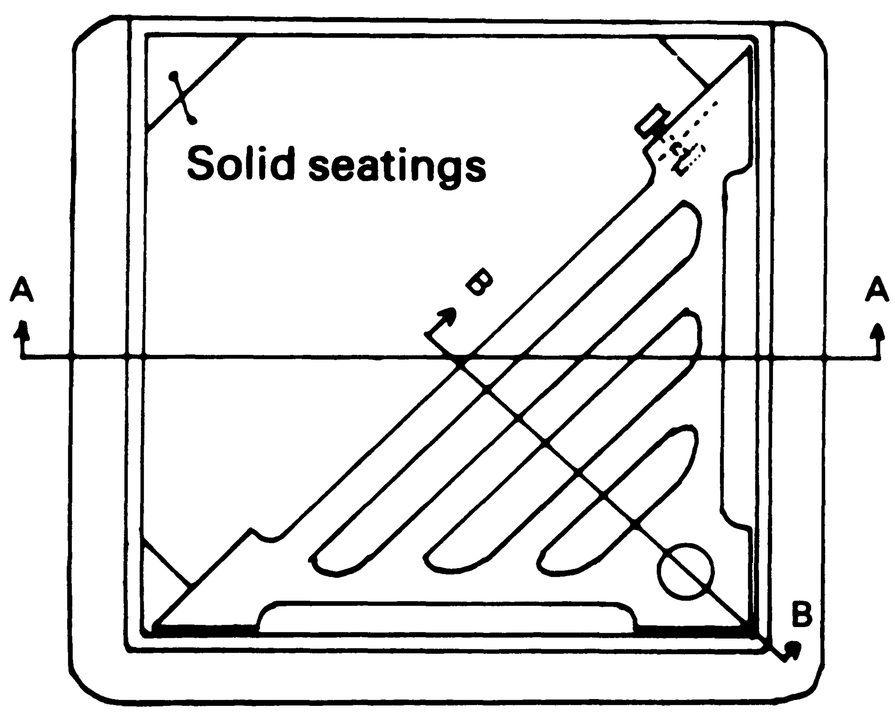

Plan showing one grating removed

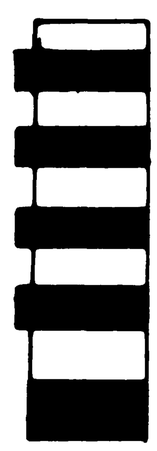

Section BB through grating

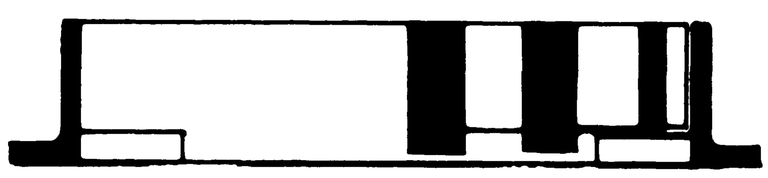

Section AA

LIST NO.	OVER GRATING (NOMINAL) mm	DEPTH mm	APPROX. WEIGHT kg	WATERWAY cm^2	BS. EN 124 CLASS
DU382A	450 x 450	75	70	900	C250
DU382B	450 x 450	100	90	900	D400
DU382C	450 x 450	150	105	900	D400
DU382D	600 x 600	150	193	1800	D400